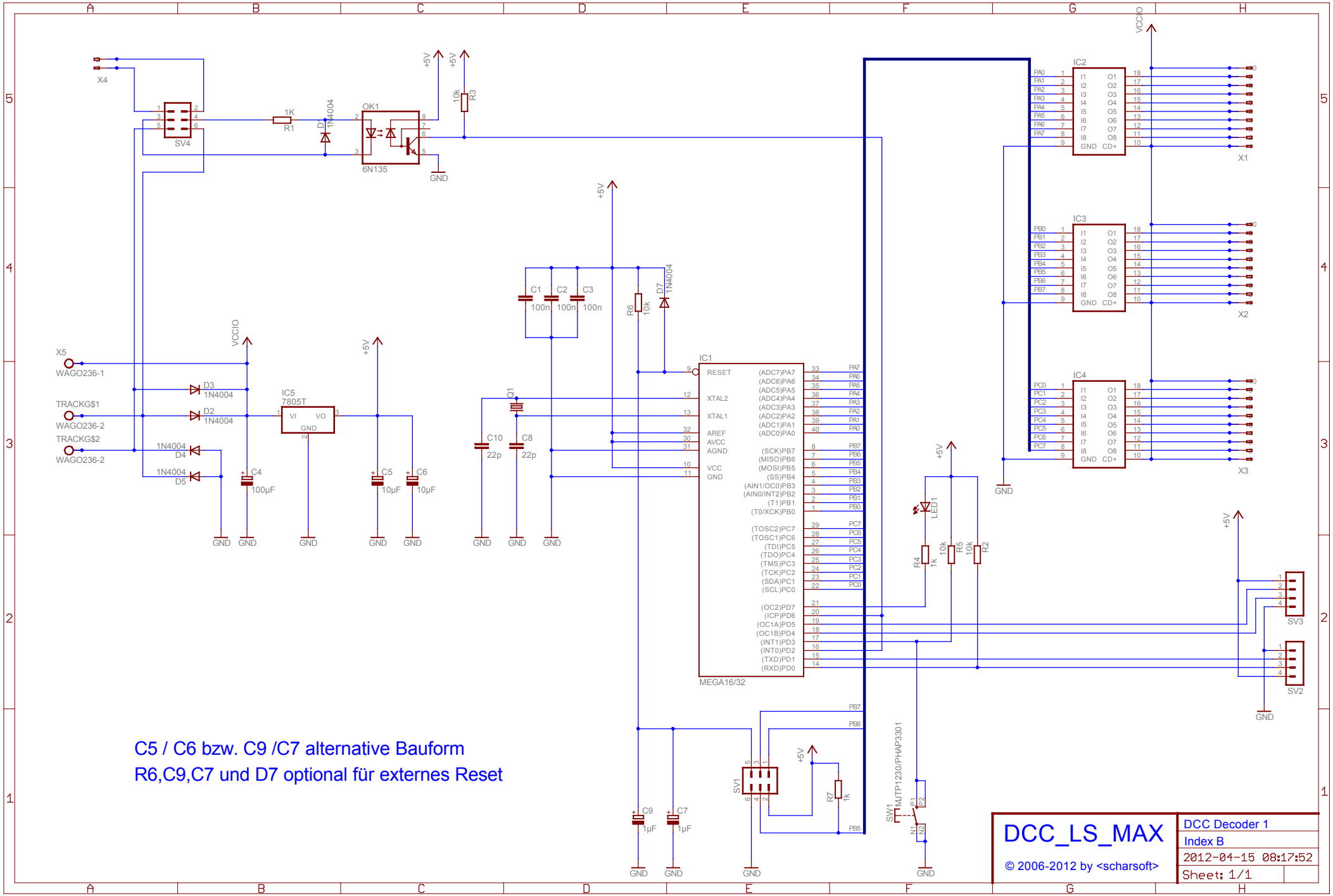

2012-04-15 14:38:53 f=1.43 d:\Projects\DCC_LightSign_Max\board_dcc1\DCC_LS_Max_1.sch (Sheet: 1/1)

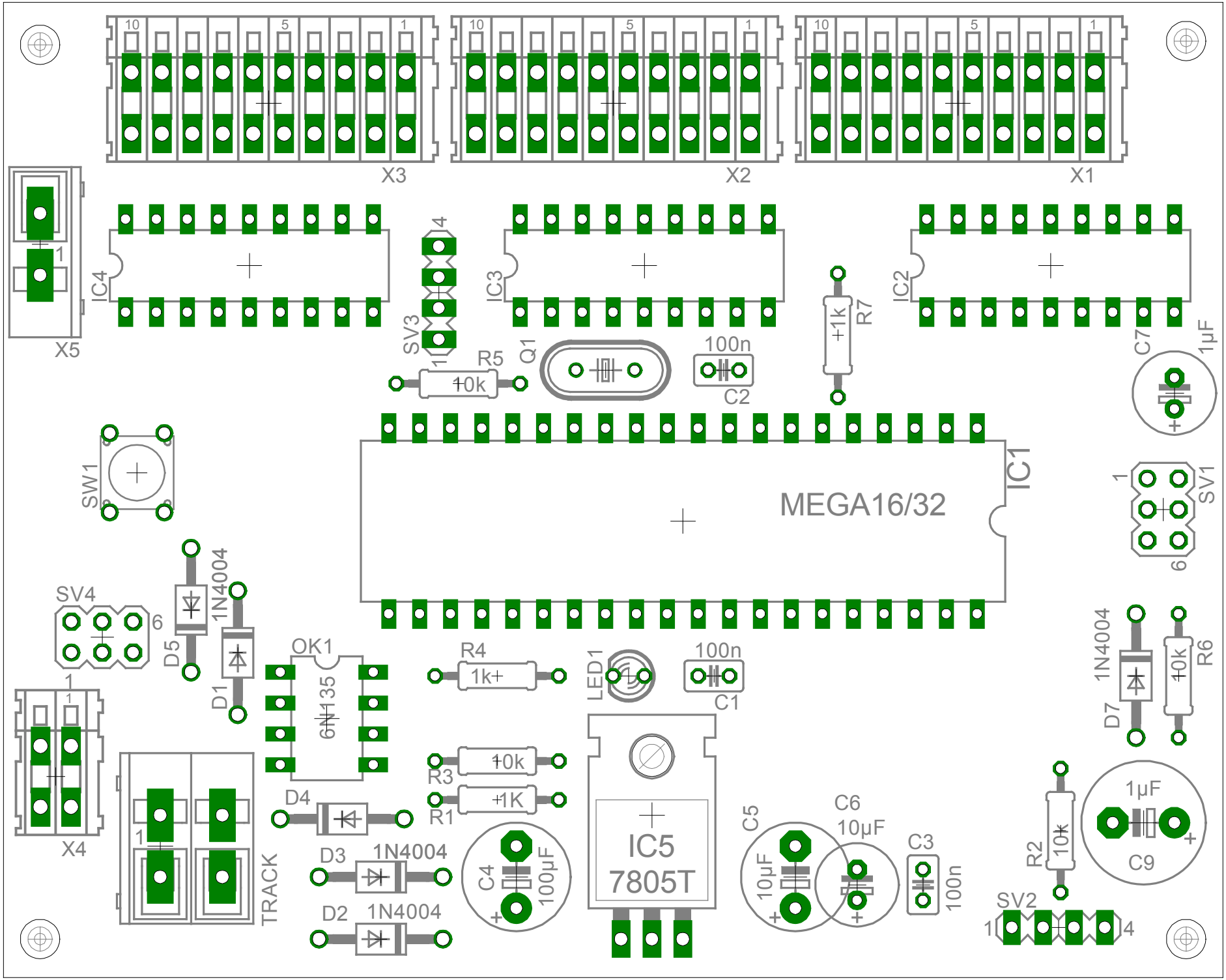

2012-04-15 14:42:26 f=4.95 d:\Projects\DCC_LightSign_Max\board_dcc1\DCC_LS_Max_1.brd

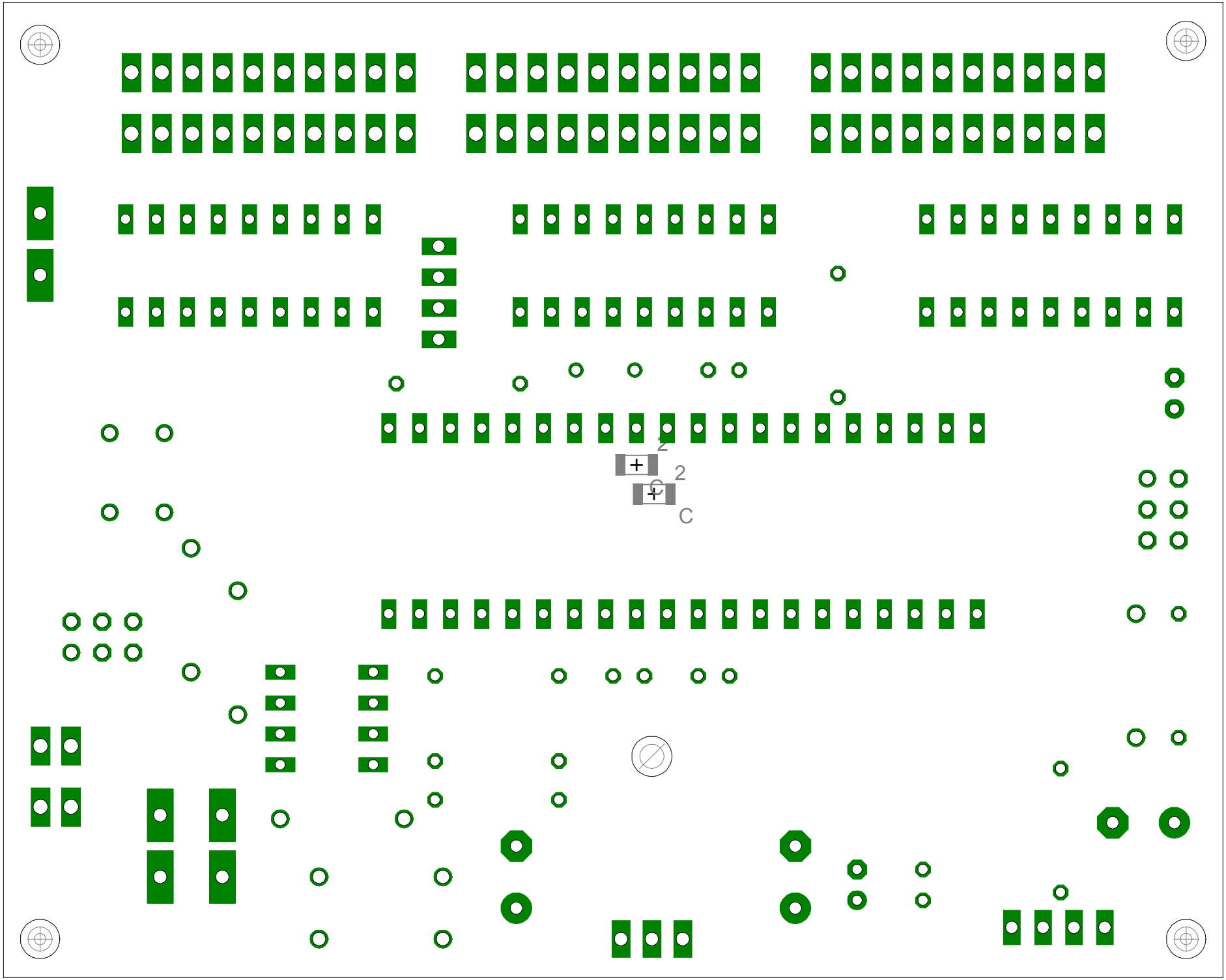

2012-04-15 14:43:10 f=4.95 d:\Projects\DCC_LightSign_Max\board_dcc1\DCC_LS_Max_1.brd

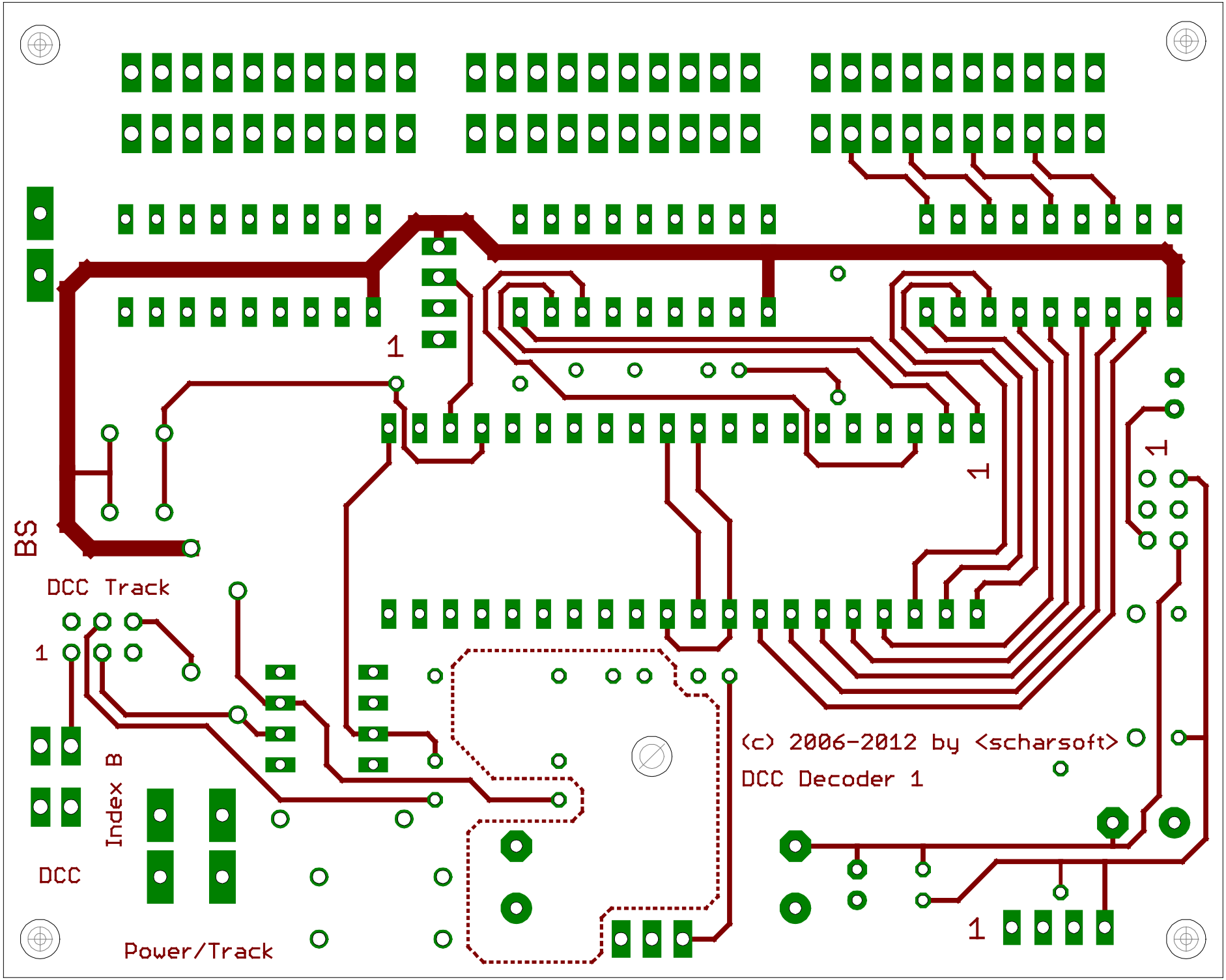

2012-04-15 14:44:02 f=4.95 d:\Projects\DCC_LightSign_Max\board_dcc1\DCC_LS_Max_1.brd

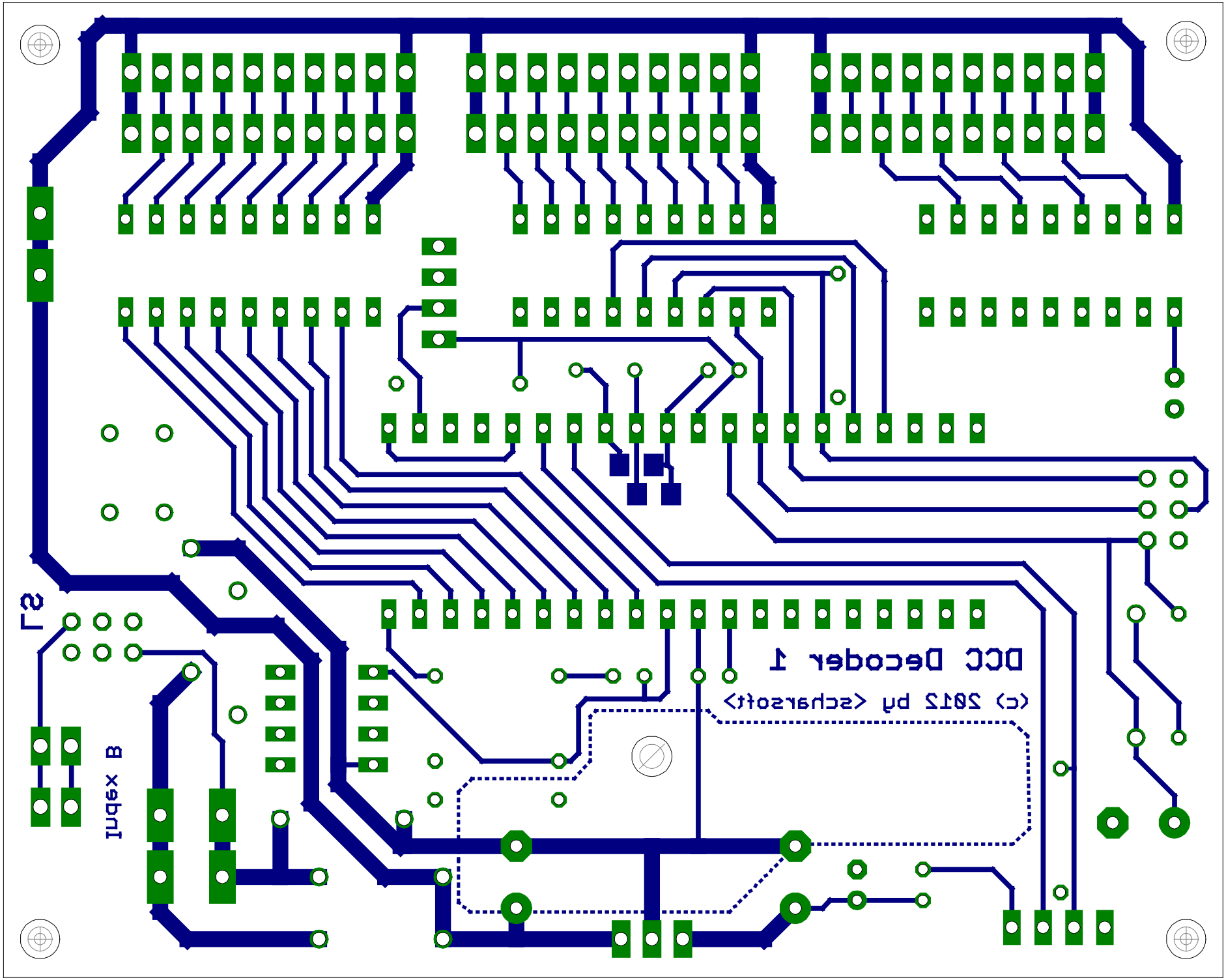

2012-04-15 14:44:28 f=4.95 d:\Projects\DCC_LightSign_Max\board_dcc1\DCC_LS_Max_1.brd